HyperFlash™ Memory Family

Spansion® HyperFlash™ Memory products are high-speed CMOS, MirrorBit® NOR Flash devices implementing the low pin-count Spansion HyperBus™ interface that achieves the industry's highest read throughput, up to 333 megabytes per second — more than five times faster than ordinary Quad SPI flash currently available with one-third the pin-count of parallel flash. HyperFlash Memories include 3V and 1.8V power supply versions in three initial densities; 128Mb, 256Mb and 512Mb.

The balance of high performance and low pin count makes HyperFlash Memories especially attractive for systems needing Instant-On operation and Interactive Graphical User Interfaces (GUI). Applications include automotive instrument clusters, infotainment/navigation systems, advanced driver assistance systems (ADAS), hand-held displays, digital cameras, projectors, factory automation, medical diagnostic equipment and home automation appliances.

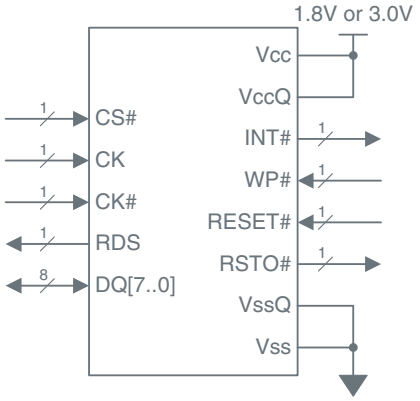

SPANSION HYPERBUS INTERFACE

The efficient 12-pin Spansion HyperBus Interface consists of an 8-pin address/data bus, a differential clock (2 signals), one Chip Select and a Read Data Strobe for the controller, reducing overall cost of the system. The HyperBus Interface pin count is dramatically lower than what is required for a parallel NOR interface and the read throughput is dramatically higher than any other popular NOR-Flash devices.

Read Throughput (MB/s)

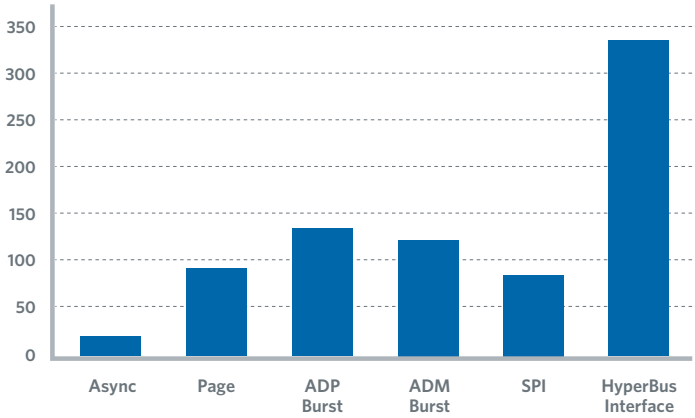

Pin Count

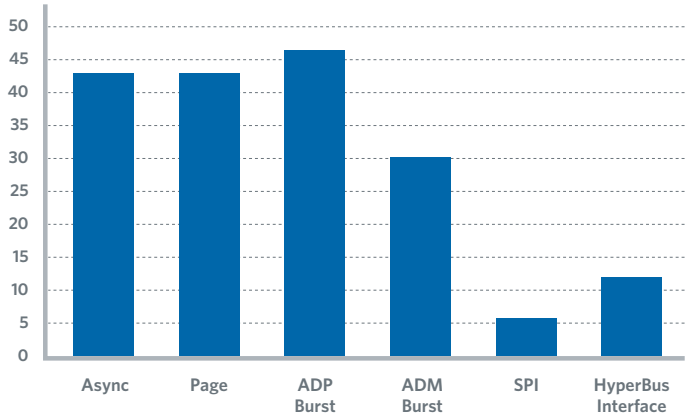

PACKAGING OPTIONS

FBGA is the primary package for HyperFlash NOR Memory. Pin compatible with Spansion's Single and Dual-Quad- SPI (2xQSPI) packages. This package allows performance scalability from one QSPI device to two QSPI devices to the highest performance HyperFlash Memory option. (Contact Spansion for availability of other package types.)

6mm x 8mm FBGA

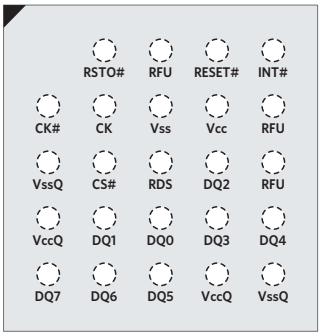

SIMPLE TRANSITION FROM QUAD SPI TO SPANSION HYPERFLASH

6mm x 8mm (5 x 5 ball footprint)

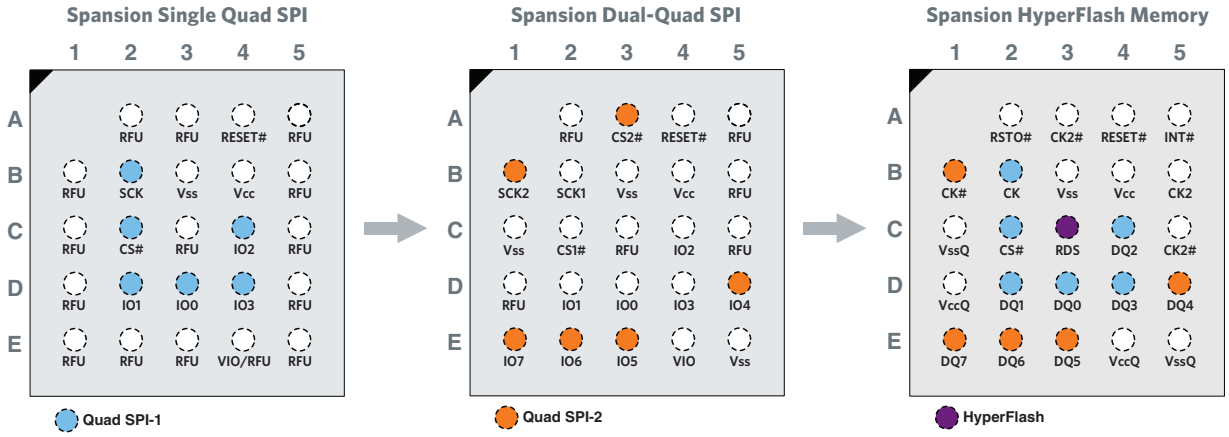

Spansion: 915 DeGuigne Drive, PO Box 3453, Sunnyvale, CA 94088-3453 USA
+1 (408) 962-2500 | 1 866 SPANSION | www.spansion.com

© 2014 Spansion®, the Spansion logo, MirrorBit®, MirrorBit® Eclipse™ and combinations thereof, are trademarks and registered trademarks of Spansion LLC in the United States and other countries. Other names used are for informational purposes only and may be trademarks of their respective owners.

www.facebook.com/spansion twitter: @Spansion, @SpansionService, @SpansionAuto www.youtube.com/spansioninc