Ultra Low Power Buck Power Management IC for Solar and Vibrations Energy Harvesting MB39C811

Ultra Low Power Management, For Battery-less Sensor Nodes

MB39C811 integrates dual full wave bridge rectifier with low loss high efficiency buck convertor for energy harvesting, and provide complete solution optimized for high output impedance energy sources such as piezoelectric transducers.

MB39C811 has 8 preset output voltage as 1.5V, 1.8V, 2.5V, 3.3V, 3.6V, 4.1V, 4.5V and 5.0V and also covers the continuous output current up to 100mA.

FEATURE

- Input Quiescent Current:
  1.5uA (Output in Regulation-No Load)
  550nA (VIN=2.5V in UVLO)
- Integrated Dual Full Wave Bridge Rectifiers
- Input Voltage Range: 2.6V to 23V
- Preset Output Voltages:
  1.5V, 1.8V, 2.5V, 3.3V, 3.6V, 4.1V, 4.5V, 5.0V
- Output Current: Up to 100mA
- Input Protective Shunt:
  VIN21V, Up to 100mA Pull-Down
- Power good output signal at input and output voltage
- QFN40: 6.0mm × 6.0mm × 0.85mm
  (Pin pitch 0.5mm)

Item	Conditions	Min	Typ	Max	Unit
Input Voltage	VIN	2.6	—	23	V
Output Voltage Select	S[2:0]=0h-7h	1.5	—	5.0	V
Quiescent Current	VIN=2.5V(UVLO)	—	550	775	nA
	VIN=4.5V(Sleep mode)	—	1.5	2.25	uA
	VIN=18V(Sleep mode)	—	1.9	2.85	uA
Operating Ambient Temperature	Ta	-40	—	+85	°C

Note: Green IT Award is an Japanese Prize.

Green IT AWARD 2013
Green IT Promotion Council
Green IT Promotion Council Chairman's Awards

BLOCK DIAGRAM

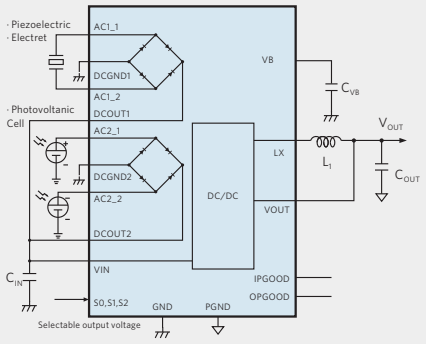

Power source: Power generator from vibrations + solar-cells

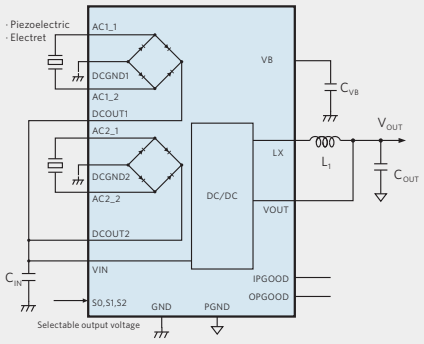

Power source: Power generator from vibrations

SYSTEM DIAGRAM

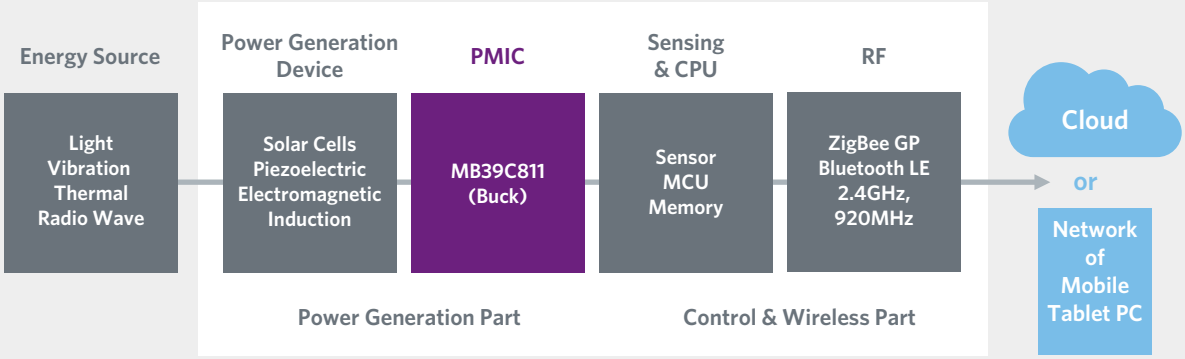

APPLICATION

- Light Energy Harvesting
- Piezoelectric Energy Harvesting
- Electro-Mechanical Energy Harvesting
- Wireless HVAC Sensors
- Standalone Nanopower Buck Regulator

STARTER KIT

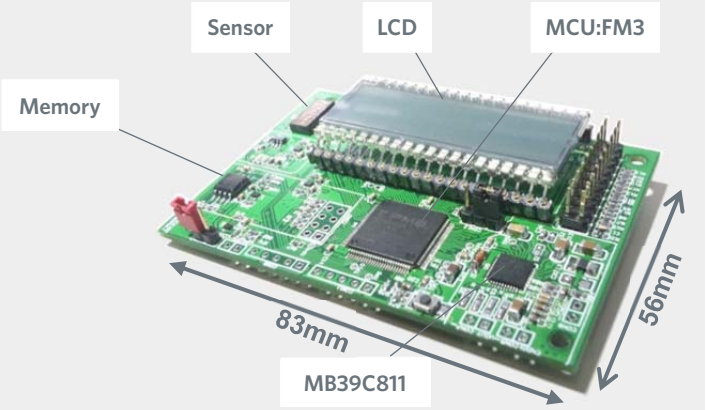

WEB DESIGN SIMULATION SERVICE

Easy DesignSim

URL: http://www.spansion.com/easydesignsim/

Contact Us: Nomura Shin-Yokohama Building, 2-10-23 Shin-Yokohama, Kohoku-Ku, Yokohama, Kanagawa, 222-0033, Japan | +81 45 473 6550

Spansion: 915 DeGuigne Drive, PO Box 3453, Sunnyvale, CA 94088-3453 USA

www.spansion.com

©2013 Spansion®, the Spansion logo, MirrorBit®, MirrorBit® Eclipse™ and combinations thereof, are trademarks and registered trademarks of Spansion LLC in the United States and other countries. Other names used are for informational purposes only and may be trademarks of their respective owners.

www.facebook.com/spansion twitter: @spansion www.youtube.com/spansioninc

AD405-00007-1v0-E, November 2013